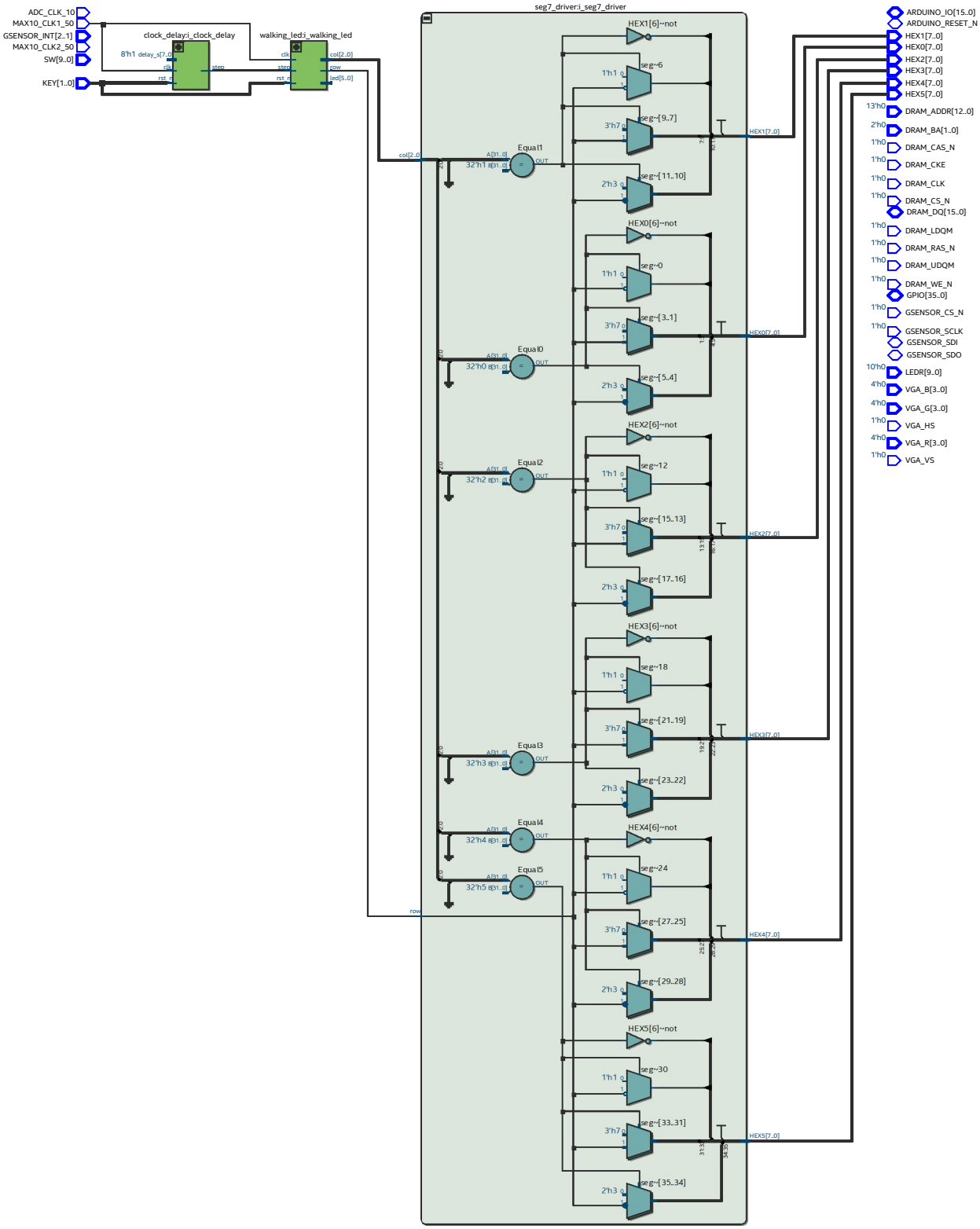
ADC_CLK_10
MAX10_CLK1_50
GSENSOR_INT[2..1]
MAX10_CLK2_50
SW[9..0]
KEY[1..0]
clock_delay:i_clock_delay
walking_led:i_walking_led
seg7_driver:i_seg7_driver
col[2..0]
row
Equal1
Equal0
Equal2
Equal3
Equal4
Equal5
HEX1[7..0]
HEX0[7..0]
HEX2[7..0]
HEX3[7..0]
HEX4[7..0]
HEX5[7..0]
ARDUINO_IO[15..0]
ARDUINO_RESET_N
DRAM_ADDR[12..0]
DRAM_BA[1..0]
DRAM_CAS_N
DRAM_CKE
DRAM_CLK
DRAM_CS_N
DRAM_DQ[15..0]
DRAM_LDQM
DRAM_RAS_N
DRAM_UDQM
DRAM_WE_N
GPIO[35..0]
GSENSOR_CS_N
GSENSOR_SCLK
GSENSOR_SDI
GSENSOR_SDO
LEDR[9..0]
VGA_B[3..0]
VGA_G[3..0]
VGA_HS
VGA_R[3..0]
VGA_VS